LOREX®
FOR BUSINESS

X5 4K FIXED

Lorex Connect X5 4K PoE Turret Camera with Color Night IQ+

Product Specifications

COMPATIBLE WITH LOREX connect X SERIES

Camera	
Image Sensor	8MP 1/1.8" CMOS
Max Resolution	4K (3840 × 2160)
Max Frame Rate	30 fps
Aspect Ratio	16:9
Wide Dynamic Range	120 dB True WDR
Min Illumination	Color: 0.0005 lux/ B/W (IR On): 0 lux
Signal-to-Noise Ratio	55 dB
Lens	
Type	Fixed
Focal Length / Aperture	2.8 mm / F1.0
Field of View	Diagonal: 113.5° Horizontal: 109.4° Vertical: 59.5°
DORI Distance	
Detect	263.8 ft (80.4 m)
Observe	105.6 ft (32.2 m)
Recognize	52.8 ft (16.1 m)
Identify	26.3 ft (8.0 m)
Video	
Compression	Nano Codec (Enhanced H.265 Compression), H.265, H.264, MJPEG
Video Streams	Main / Sub / Third Stream
Bit Rate Control	CBR / VBR
Video Format	NTSC
Audio	
Microphone	Yes
Speaker	Yes
Two-Way Talk	Yes
Night Vision	
IR Night Vision	Yes Up to 98 ft (30) m in total darkness
Color Night IQ+	Yes

AI Smart Features	
Detection	Person, Vehicle, Face Recognition, Intrusion, Loitering, Wrong-Way, Unauthorized Parking
Perimeter Protection	Line-Crossing, Dual-Line Crossing
Tracking & Monitoring	Smart Motion
Crowd Analytics	Heat Map, People Counting
Active Deterrence	Red and Blue Light, White Light, Siren, Pre-Recorded Messages[1]
Network & Connectivity	
Interface	RJ45 (10/100 Base-T)
Protocols / Integration	ONVIF, RTSP
Storage & Power	
Local SD Storage	MicroSD Slot (Up to 1 TB)*
Power Supply	12V DC / PoE (IEEE 802.3af)
Max Power Consumption	8 W (DC) / 10.5 W (PoE)
Physical	
Housing Material	Aluminum Alloy
Colors	Black / White
Mounting Adjustment Range	Pan: 335° / Tilt: 75° / Rotation: 360°
Camera Dimensions (D × H)	Ø 4.33 × 3.74 in (Ø 110 × 95 mm)
Camera Weight	1.17 lb (0.53 kg)
Environmental	
IP Rating	IP66
Operating Temperature	-22°F to 140°F (-30°C to 60°C)
Operating Humidity	≤ 90% RH
Package Information	
Black: CNE01P-1TB-AB1	UPC: 6-95529-06632-5
White: CNE01P-1TW-AB1	UPC: 6-95529-06637-0
Package Type	Brown Box
Package Dimensions (W × D × H)	6.89 × 6.50 × 7.28 in (175 × 165 × 185 mm)
Package Weight	1.39 lb (0.63 kg)

Series Family: X
Series Line: X5
SKU: CNE01P-1TB-AB1, CNE01P-1TW-AB1

LOREX®
FOR BUSINESS

X5 4K FIXED

Lorex Connect X5 4K PoE Turret Camera with Color Night IQ+

Product Specifications

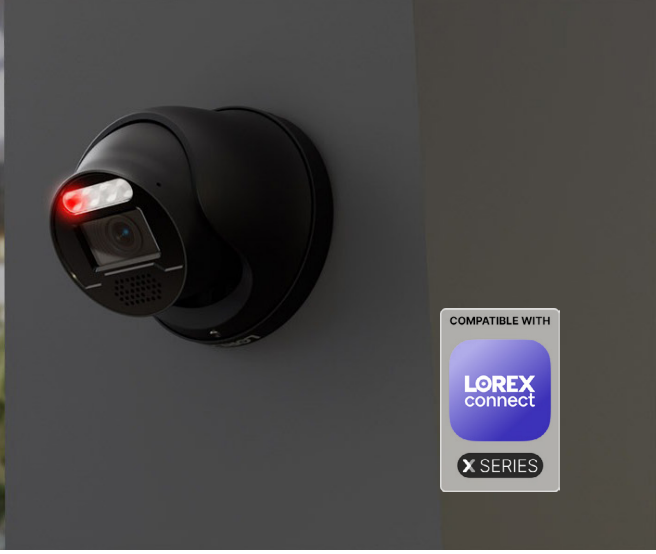

Package Cube	0.1887 ft³ (0.00534 m³)
Package Contents	1 × Lorex Connect X5 4K PoE Turret Camera with Color Night IQ+ 1 × Mounting Template 3 × Mounting Anchors 3 × Mounting Screws 1 × Weather-Resistant RJ45 Cable Gland

Camera Dimensions

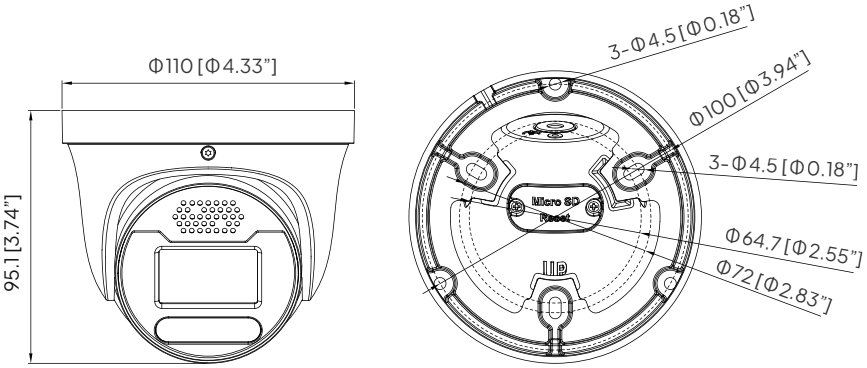

Unit: mm [inch]

Disclaimers:
1. Compatible with select Lorex Network Video Recorders. For a full list of compatible recorders visit: www.lorex.com/compatibility.
2. Color nighttime video typically switches to black & white IR night vision when there is not sufficient ambient light to ensure optimal low-light image quality.
3. Stated IR illumination range is based on ideal conditions in typical outdoor nighttime ambient lighting up to 98 ft / 30 m in total darkness. Actual range and image clarity depends on installation location, viewing area and light reflection/absorption.
4. Audio recording is disabled by default. Audio recording without consent is illegal in certain jurisdictions. Lorex Technology does not assume liability for any use of its product that fails to conform with local laws.
5. Not intended for submersion in water. Installation in a sheltered location recommended.

*A microSD card can be inserted for independent recording. Data can be accessed through the camera using a web browser but will not upload to the NVR or to the cloud for mobile app viewing.

Lorex products are designed for consumer and business use only and not for US federal governments, federally-funded projects or contractors subject to NDAA.

© 2026 Lorex Corporation
As our product is subject to continuous improvement, Lorex Technology & subsidiaries reserve the right to modify product design, specifications & prices without notice and without incurring any obligation. E&OE.

Series Family: X
Series Line: X5
SKU: CNE01P-1TB-AB1, CNE01P-1TW-AB1
www.lorex.com

Lorex Corporation
10440 Little Patuxent Parkway, Ste. 300
Columbia, MD 21044, United States

Lorex Technology Inc.
250 Royal Crest Court
Markham, ON L3R 3C3, Canada

08282026-2