LOREX connect

COMPATIBLE WITH LOREX connect V SERIES

V3 4K Turret

Lorex Connect V3 4K PoE Turret Camera with Smart AI Detection

Product Specifications

Camera & Imaging

Video Transmission Technology	IP
Image Sensor	1/2.7" CMOS
Lens Type	Fixed 2.8 mm, F1.6
Effective Pixels	3840 (H) × 2160 (V)
Resolution / Frame Rate	4K (8 MP) @ 15 fps
Field of View (FoV)	Diagonal: 126°
Minimum Focusing Distance	6.6 ft (2 m)
Wide Dynamic Range (WDR)	Supported
Electronic Shutter Speed	1/5 – 1/20,000 s (DWDR ON / OFF)
White Balance	Auto / Daylight / Cloudy / Tungsten / Sunset / Night

Video & Audio

Video Compression	H.265 / H.264
Audio	Built-in Microphone and Speaker
2–Way Talk	Supported (full-duplex)
Speaker Output	81 dB @ 2 ft (0.6 m)

Night Vision & Active Deterrence

Infrared (IR) Night Vision Range	Up to 82 ft (25 m) in total darkness
Color Night Vision	Supported
Smart Security Lighting	Yes, White Color
Deterrence Light	Yes

AI Detection & Smart Features

Smart Motion Detection	Person and Vehicle Detection

Storage & Power

Local Storage	MicroSD Card Slot (up to 256 GB)*
Power Supply	PoE (Power over Ethernet, IEEE 802.3af) / 12 V DC
Maximum Power Consumption	9.5 W

Network & Integration

Ethernet Interface	RJ45 (10/100BASE-T)
Network Protocols	TCP/IP, HTTP, DHCP, DNS, DDNS, RTP/RTSP, SMTP, NTP, UPnP, SNMP, HTTPS, FTP

Physical & Environmental

Housing Material	Metal
Operating Temperature	-4°F / -20°C to 122°F / 50°C
Operating Humidity	≤ 90% RH
Environmental Rating	IP67 (Indoor / Outdoor Use)
Camera Dimensions (D × H)	3.94 × 3.15 in (100.04 × 80.01 mm)
Camera Weight	0.85 lbs (0.39 kg)

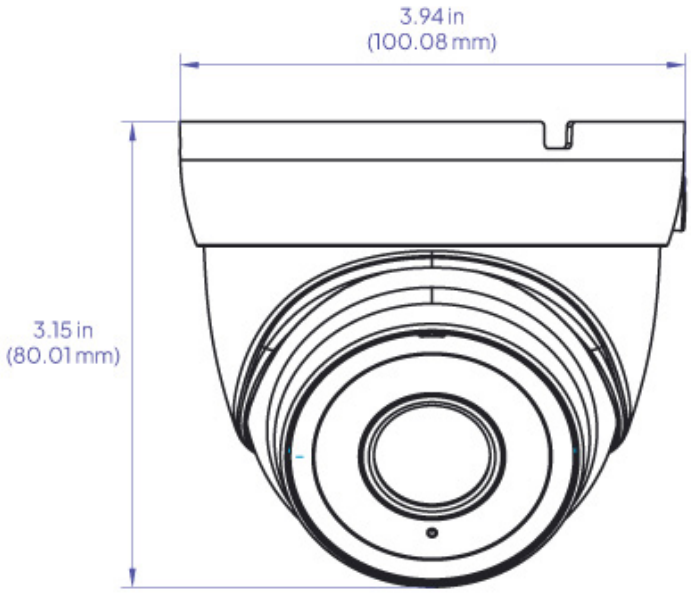

Series Family: V

Series Line: V3

SKU: CN301A-1TW-AE1, CN301A-1TB-AE1

Lorex Corporation
10440 Little Patuxent Parkway, Ste. 300,
Columbia, MD 21044, United States

© 2026 Lorex Corporation
As our product is subject to continuous improvement, Lorex Technology & subsidiaries reserve the right to modify product design, specifications & prices without notice and without incurring any obligation. E&OE.

020420265–1

V3 4K Turret

Lorex Connect V3 4K PoE Turret Camera with Smart AI Detection

Product Specifications

Packaging Information

CN301A-1TW-AB1 (White)	UPC: 6-95529-06399-7
CN301A-1TB-AB1 (Black)	UPC: 6-95529-06400-0
Package Type	Brown Box
Package Dimensions (W × D × H)	6.81 × 6.46 × 3.62 in (172.97 × 164.08 × 91.95)
Package Weight	0.44 lbs (0.20 kg)
Package Cube	0.09 ft³ (0.025 m³)
Package Contents	• 4K Wired PoE Turret Camera • Mounting Hardware (Template, Bracket, 3 × Anchors and Screws) • Weather-Resistant RJ45 Cable Cap (Gland)

Disclaimers:
1. Compatible with select Lorex Network Video Recorders HD recorders. For a full list of compatible recorders visit: www.lorex.com/compatibility.
2. Color nighttime video typically switches to black & white IR night vision when there is not sufficient ambient light to ensure optimal low-light image quality.
3. Stated IR illumination range is based on ideal conditions in typical outdoor nighttime ambient lighting (up to 82.02 ft / 25 m in total darkness). Actual range and image clarity depends on installation location, viewing area and light reflection/absorption.
4. Audio recording is disabled by default. Audio recording without consent is illegal in certain jurisdictions. Lorex Technology does not assume liability for any use of its product that fails to conform with local laws.
5. Not intended for submersion in water. Installation in a sheltered location recommended.
6. Cable length is dependent on product configuration. See product packaging for details.

*A microSD card can be inserted for independent recording. Data can be accessed through the camera using a web browser but will not upload to the NVR or to the cloud for mobile app viewing.

Lorex products are designed for consumer and business use only and not for US federal governments, federally-funded projects or contractors subject to NDAA.

Series Family: V

Series Line: V3

SKU: CN301A-1TW-AE1, CN301A-1TB-AE1

www.lorex.com

Lorex Corporation
10440 Little Patuxent Parkway, Ste. 300,
Columbia, MD 21044, United States
© 2026 Lorex Corporation
As our product is subject to continuous improvement, Lorex Technology & subsidiaries reserve the right to modify product design, specifications & prices without notice and without incurring any obligation. E&OE.
02042026-1